Contura

i50

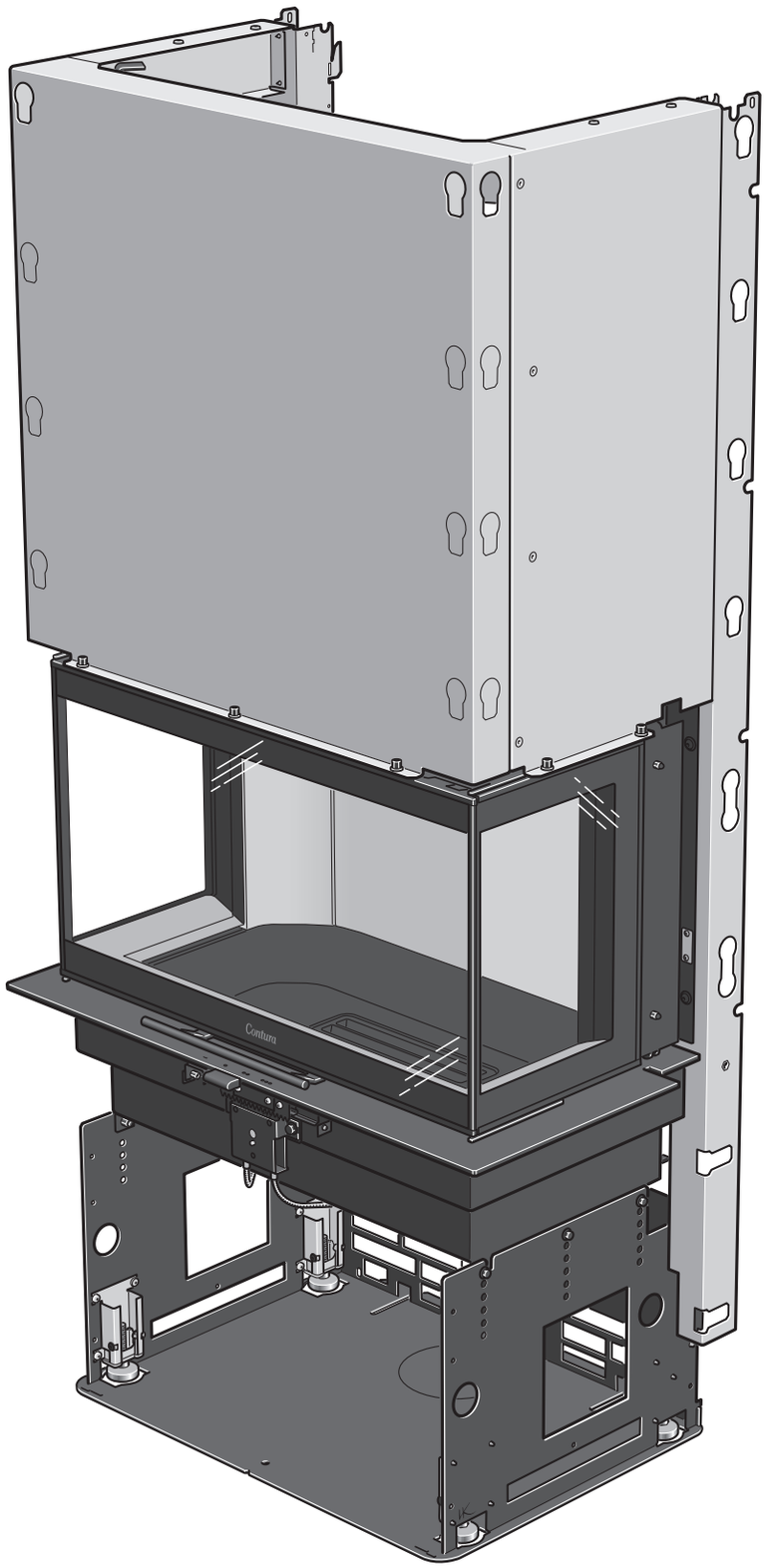

Installation instruction

SE

Fakta	3
Inbyggnadsexempel	7
Innan montering	57

DE

Fakten	9
Installationsbeispiele	13
Vor der Montage	57

NO

Fakta	15
Innbyggingseksempel	19
Før montering	57

FR

Données Techniques	21
Exemple d'encastrement	25
Avant de procéder au montage	57

GB

Facts	27
Recess example	31
Prior to installation	57

DK

Fakta	33
Indbygningseksempel	37
Før opstilling	57

FI

Tiedot	39
Asennusesimerkki	43
Ennen asennusta	57

IT

Dati Tecnici	45
Esempi di rivestimento	49
Prima del montaggio	57

NL

Gegevens	51
Inbouwvoorbeeld	55
Voorafgaand aan montage	57



DOWNLOAD DOCUMENTS

SE "Prestandadeklaration", "EU-försäkran om överensstämmelse", "Teknisk dokumentation", "Energy Classification" och "Garantibevis" finns tillgängliga på contura.eu

DE „Leistungserklärung", „EU-Konformitätserklärung", „Technische Dokumentation", „Energieklassifizierung" und „Garantieschein" sind unter contura.eu verfügbar

NO "Ytelseserklæring", "EU-samsvarserklæring", "Teknisk dokumentasjon", "Energiklassifisering" og "Garantibevis" er tilgjengelige på contura.eu

FR « Déclaration des performances », « Déclaration de conformité UE », « Documentation technique », « Classification énergétique » et « Certificat de garantie » sont disponibles sur contura.eu

GB "Performance declaration", "EU Declaration of Conformity", "Technical Documentation", "Energy Classification" and "Warranty Certificate" are available from contura.eu

DK Du finder "Ydeevnedeklaration", "EU-overensstemmelseserklæring", "Teknisk dokumentation", "Energiklassificering" og "Garantibevis" på contura.eu

FI "Suoritustasoilmoitus", "EU-vaatimustenmukaisuusvakuutus", "Tekninen dokumentaatio", "Energialuokitus" ja "Takuutodistus" ovat saatavilla osoitteessa contura.eu

IT La "Dichiarazione di Prestazione", la "Dichiarazione di Conformità UE", la "Documentazione Tecnica", la "Classificazione Energetica" e il "Certificato di Garanzia" sono disponibili su contura.eu

NL "Prestatieverklaring", "EU-verklaring van overeenstemming", "Technische documentatie", "Energy Classification" en "Garantiebewijs" zijn beschikbaar op contura.eu

Facts



6-11 kW

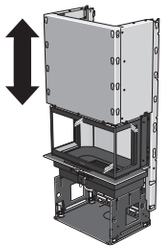

1600 mm

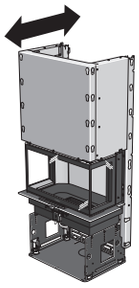

500 mm

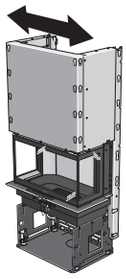

765 mm



155 kg

Nominal effect	8 kW
Efficiency	80 %
Flue gas temperature in the connection at nominal output	334°C
Flue gas mass flow	7,3 g/s
Air tightness class	Type BE
Load weight of chimney	Max. 120 kg

Complies with EU Regulation No. 305/2011 for construction products and harmonised standard EN 16510-2-2:2022



THE INSERT BECOMES VERY HOT

Parts of the insert become very hot when it is in use and can cause burns if touched. You should also be careful of the heat that transfers through the door glass. Combustible materials must be kept at the stated safe distance to prevent the risk of fire. A smouldering fire emits gases that can suddenly ignite and cause material damage and personal injury.

Installation by a licensed professional

This manual contains instructions on how to assemble and install the insert. We recommend the insert be installed by a qualified tradesperson to ensure it functions safely and properly. Contact one of our dealers who can recommend professional installers.

Planning permission

You must apply for planning permission from your local authority before installing a stove or erecting a chimney. We recommend you contact your local authority for advice and information on planning permission.

Structural support

If the firebox is to be positioned on a wooden joist, a structural engineer should evaluate the load capacity of the floor. When the gross weight exceeds 400 kg, reinforcement of the wooden joists is usually necessary.

Hearth plate

Due to the risk of falling embers, a flammable floor must be protected by a hearth plate. It must extend 300 mm in front of the stove and 100 mm on each side of the stove, or have a 200 mm extension on each side of the opening. The hearth plate can consist of natural stone, concrete, metal plate or glass. A glass hearth plate is available as an accessory for these models.

Final inspection of the installation

When it has been installed, the insert must be inspected by a licensed chimney sweep before it can be used. You should also read the "Lighting instructions" before lighting the stove for the first time.

Walls behind

If your Contura i50 is to be installed against a combustible wall, the wall must be protected by a firewall.

The following material requirements are made of the firewall:
The building material must not be combustible.
The thermal conductivity coefficient λ must be a maximum of 0.14 W/mK. The thickness of the building material must always be at least 100 mm. In cases where the building material's insulation properties are given as a U-Value, this must be a maximum of
1.4 W/m²K.

List of suitable materials:

Aerated concrete	**λ = 0.12-0.14**
Vermiculite	**λ = 0.12-0.14**
Calcium silicate	**λ = 0.09**

Contact your chimney sweep for advice in choice of other materials. Remember that even a non-combustible wall may require protection if it is a load bearing wall or has combustible material
behind it.

Contura reserves the right to change dimensions and procedures specified in these instructions at any time without notice. Access the latest version at www.contura.eu

Important dimensions

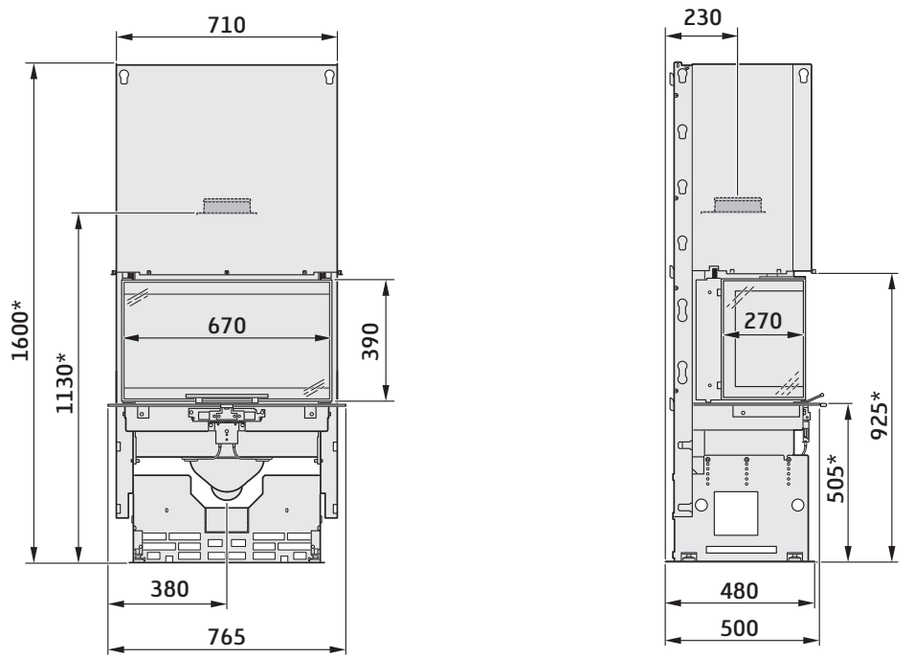

* The insert can be lowered 80 mm (at 16 mm intervals).

For installation in the UK and in smoke control areas

Mandatory for smoke control areas

The Contura i50 and i51, 8 kW woodburning stoves has been recommended as suitable for use in smoke control areas. This when burning wood logs and operated in accordance with these instructions and when fitted with a permanent stop to prevent closure of primary air control beyond the 52 mm² open position, secondary air control beyond the 500 mm² open position and the tertiary air control beyond the 215 mm² open position.

The permanent stop must be installed if the appliance is to be used in a smoke control area, this stop must not be removed in smoke control areas, otherwise an offence will be committed if the appliance is used without the permanent stop in place.

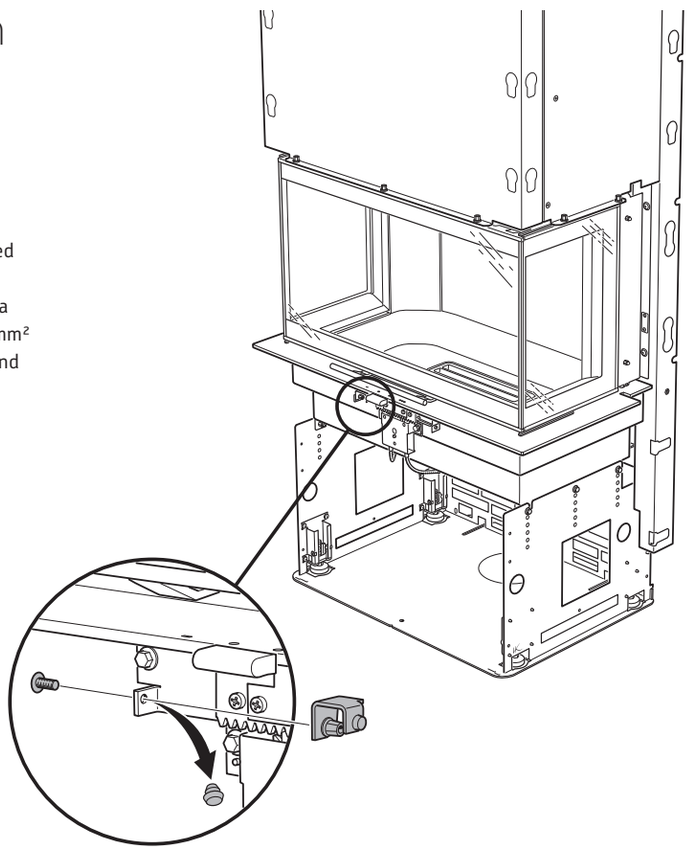

Connection to chimney

The insert is approved for connection to a chimney designed to withstand flue gas temperatures of up to 350°C. The external diameter of the connection sleeve is Ø150 mm. The insert requires a chimney draft that creates a negative pressure of 20–25 Pa in the firebox. The draft is affected primarily by the length and area of the chimney and also by how well sealed it is. The minimum recommended chimney length is 3.5 m and a suitable cross-section area is 150-200 cm^2 (Ø140-160 mm). Carefully check that the chimney is sealed and that there is no leakage of smoke from the soot doors or connections.
Note that sharp bends and horizontal lengths in a flue pipe reduce the draft in the chimney. The maximum horizontal length of flue pipe allowed is 1 m, provided the flue pipe rises vertically for at least 5 m. It must be possible to sweep the full length of the flue, and the soot doors must be easily accessible.

If two fireplaces are connected to the same chimney flue, the stove must be fitted with a self-closing door.

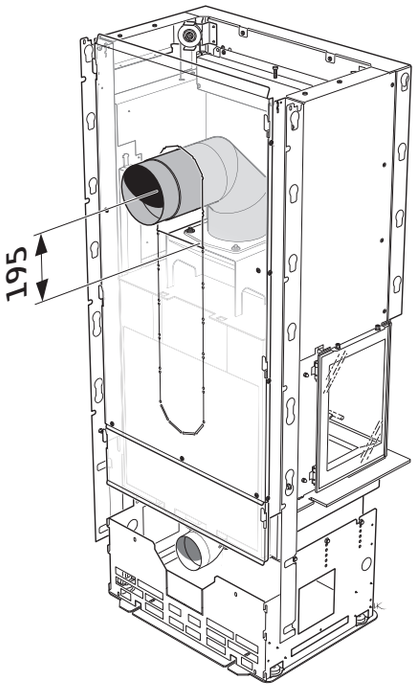

Rear connection

If connecting at the rear, we recommend using a 45°+45° angle with a soot hatch and with the centre 195 mm above the sleeve.

It is important that sweeping can be carried out through convection grates or a hatch in the surround.

Combustion air supply

Supply of combustion must be provided. Combustion air can be drawn directly via a duct from outside, or indirectly via a vent in the outer wall of the room where the stove is placed. The amount of combustion air that is used for combustion is approx. 25 m^3/h.

Some installation alternatives are shown below. The connection sleeve on the stove has an external diameter of Ø100 mm.

In warm spaces, the duct should be insulated to prevent condensation using 30 mm mineral wool covered with a vapour barrier (aluminium tape). It is important that the lead-in, between the pipe and the wall (or floor), is sealed using jointing compound.

A 1-metre combustion-air tube insulated to prevent condensation is available as an optional extra.

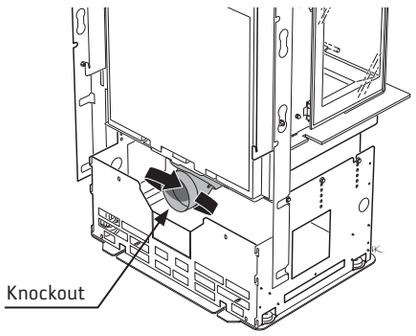

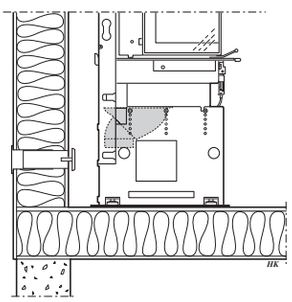

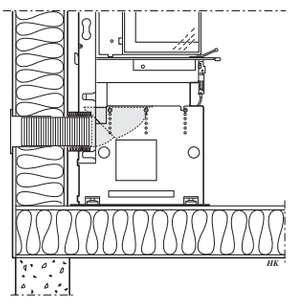

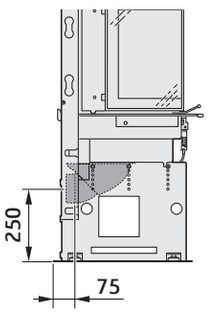

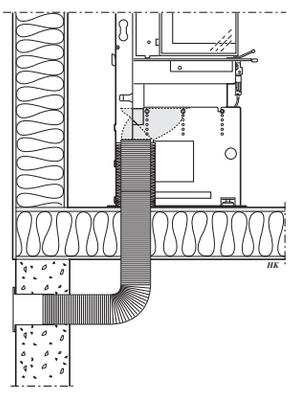

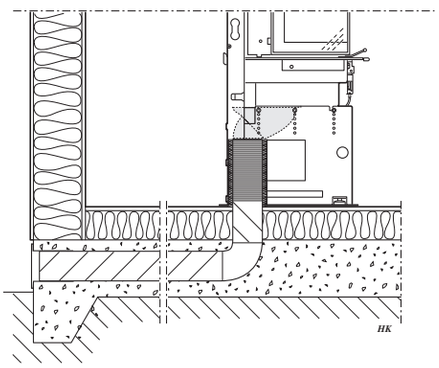

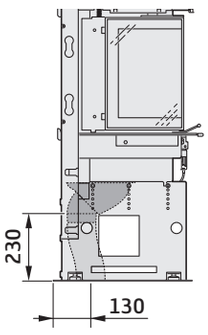

Recessing the insert

When recessing the insert, adjacent walls that are not classed as fire walls or are considered unsuitable for heat loads must be protected by non-combustible material according to the specification below.
All joints on the non-combustible material must be sealed using the manufacture's recommended method. The area between the insert and the recess must be ventilated according to the specification/dimension diagrams on page 32.

When connecting a steel flue, please refer to the particular manufacturer's installation instructions. Observe the safety distance to combustible material required by the steel flue Heat radiation from the door is strong and because of this combustible material must not be placed closer than 1.5 m in front of the door. When recessing, building material must not be in direct contact with the insert due to the thermal expansion of the insert. Note that building regulations apply regarding the area below and in front of the insert, see section "Hearth plate".

Material requirements

The building material must not be combustible.
The thermal conductivity coefficient λ must be a maximum of 0.14 W/mK.
The thickness of the building material must always be at least 100 mm.
In cases where the building material's insulation properties are given as a U-Value, this must be a maximum of 1.4 W/ m²K.

List of suitable materials:

Aerated concrete	**λ = 0.12-0.14**
Vermiculite	**λ = 0.12-0.14**
Calcium silicate	**λ = 0.09**

Sealing

The recess must not go all the way up to the ceiling, leave an air gap of at least 20 mm closest to the ceiling. The recess must be sealed off above the convection exhaust. The seal must be 100 mm above the convection exhaust's upper edge and must be made of 100 mm non-flammable material according to the material requirements above. Use heat-resistant silicone, for example, between the seal and chimney.

Convection air

The convection air ventilates the surround, cools the insert and transports the hot air out into the room. The effective cross section area on the air intake and exhaust must not be less than the stated values. The air intake must be positioned somewhere between floor level and the bottom of the insert, at the front or on the sides of the recess. The vent must be positioned above the insert's highest point at the front or to the sides of the recess.

If the air intake respectively the vent is positioned on the sides, the areas for the left respectively right sides must be the same size to ensure that the insert is evenly cooled.
The distance from the exhausts on the sides to the combustible wall behind must be 100 mm.
Observe the minimum distance up to the ceiling (see diagram on page 32).

Convection air in: 600 cm²
Convection air out: 600 cm²

If the convection outlets are directed upwards the following applies
- the recess must be free-standing or placed against a non-combustible wall.
- the distance from the air outlet to combustible roof must be at least 750 mm.

Service

Access to the damper and counterweight must be ensured via doors or ventilation grilles in the surround.

Recess example

Wall of combustible material

Wall of non-combustible material, made of 100 mm aerated concrete in the recess example.

Chimney breast

Wall of non-combustible material that is not in contact with combustible material and therefore has no minimum thickness requirement.

Unless otherwise stated, these are the minimum dimensions.

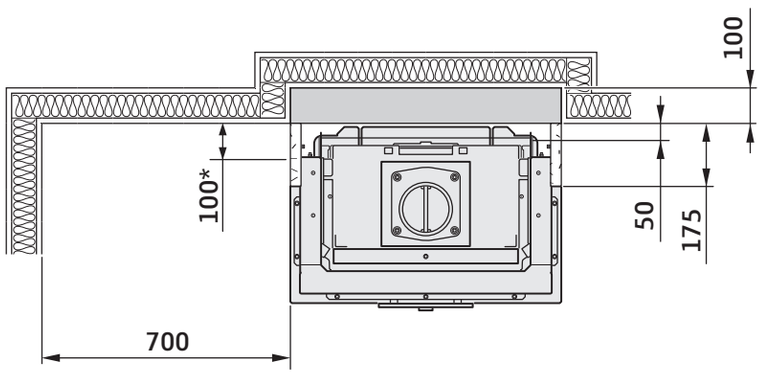

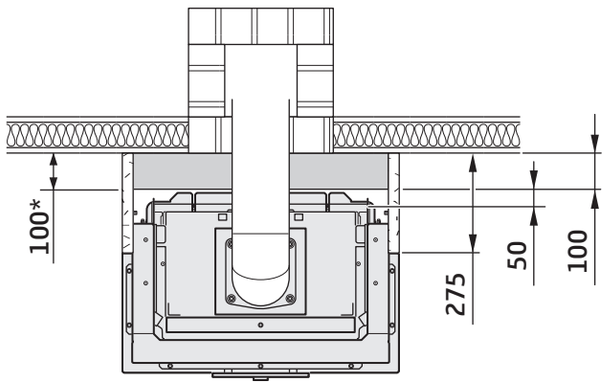

* The distance between the exhausts on the sides and a combustible wall behind should be at least 100 mm.

Recess example

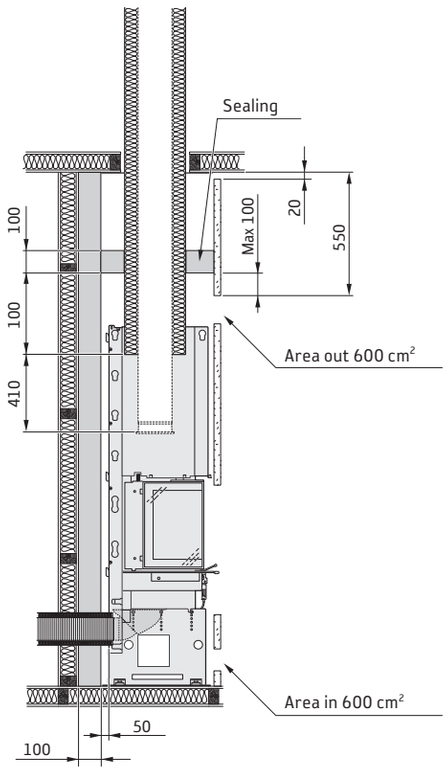

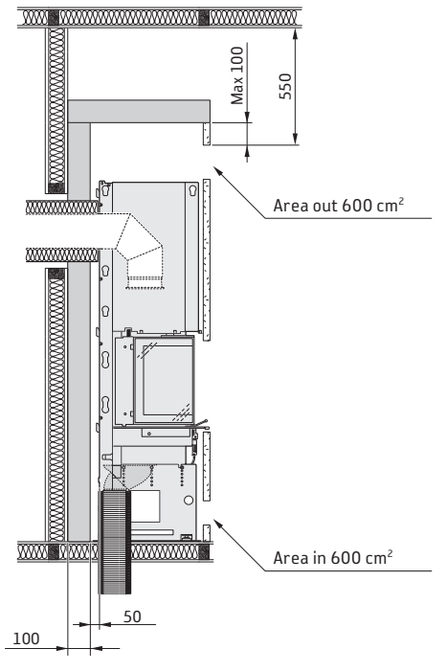

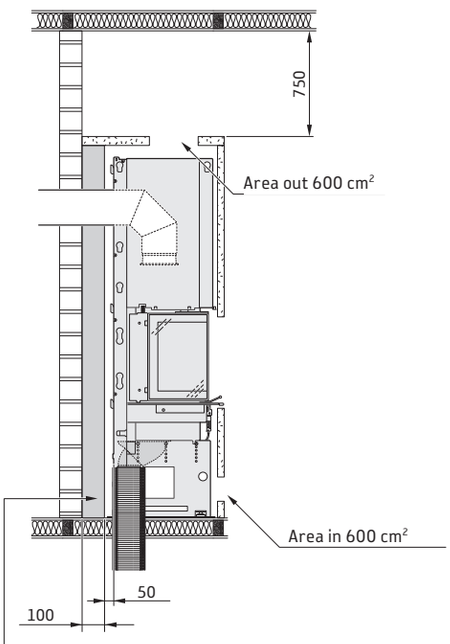

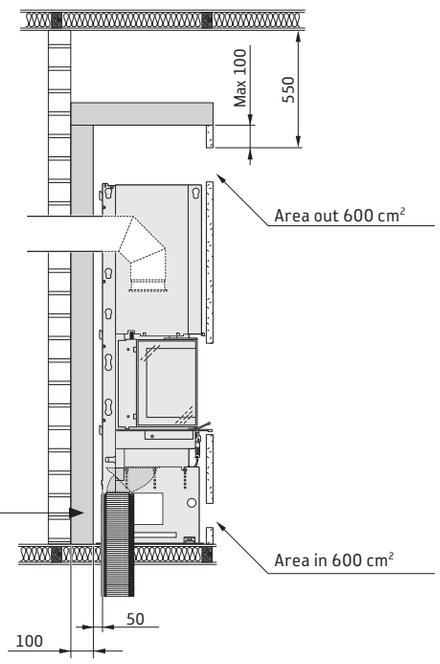

Can be excluded if the chimney breast behind is approved and meets full safety requirements according to the authorized inspection body.

Always observe the safety distances to combustible material required by a steel flue

The dimensions are the minimum dimensions, unless otherwise stated.

SE Innan montering

Om insatsen behöver läggas ned för att förflyttas bör lösa delar demonteras. Demontering av eldstadsbeklädnad beskrivs i slutet av denna anvisning.

1 Rökhylla av plåt
2 Vermiculit
3 Gjutgodsbotten
4 Spjäll
5 Typskylt
6 Tilluftsstos
7 Justerbara fötter
8 Asklåda
9 Roster
10 Serienummer

DE Vor der Montage

Wenn der Einsatz in liegender Position versetzt werden muss, sind lose Komponenten zu demontieren. Die Demontage der Brennraumauskleidung wird am Ende dieser Anleitung beschrieben.

1 Rauchumlenkplatte aus Blech
2 Vermiculit
3 Gussboden
4 Klappe
5 Typenschild
6 Zuluftanschluss
7 Verstellbare Füße
8 Aschekasten
9 Rost
10 Seriennummer

NO Før montering

Hvis innsatsen må legges ned for å flyttes, bør løse deler demonteres. Demontering av brennplater og hvelv er beskrevet mot slutten av denne veiledningen.

1 Røykhylle i metall
2 Vermikulitt
3 Støpegodsbunn
4 Spjeld
5 Typeskilt
6 Tilluftsstuss
7 Justerbare føtter
8 Askeskuff
9 Rist
10 Serienummer

FR Avant de procéder au montage

Les éléments non fixés devront être déposés si l'insert doit être couché pour être déplacé. Le démontage de l'habillage du foyer est décrite à la fin de ce document.

1 Déflecteur de fumée en tôle d'acier
2 Vermiculite
3 Fond en fonte
4 Registre
5 Plaque signalétique
6 Manchon d'arrivée d'air
7 Pieds réglables
8 Cendrier
9 Grille
10 Numéro de série

GB Prior to installation

If the insert needs to be put down to be moved, loose components should be removed. Removal of the hearth cladding is described at the end of these installation instructions.

1 Metal baffle plate
2 Vermiculite
3 Cast-iron base
4 Damper
5 Type plate
6 Air inlet
7 Adjustable feet
8 Ash pan
9 Grate
10 Serial number

DK Før opstilling

Hvis indsatsen skal lægges ned for at blive flyttet, bør løsdele afmonteres. Afmontering af ovnbeklædning beskrives i slutningen af denne vejledning.

1 Røgvendeplade af stål
2 Vermiculite
3 Støbejernsbund
4 Spjæld
5 Typeskilt
6 Forbrændingsluftstuds
7 Justerbare fødder
8 Askeskuffe
9 Rist
10 Serienummer

FI Ennen asennusta

Jos tulipesä pitää siirtää kyljellään, irto-osat pitää irrottaa. Tulipesän verhoilun irrotus kuvataan ohjeen lopussa.

1 Peltisavuhylly
2 Vermikuliitti
3 Valurautapohja
4 Palamisilmasäädin
5 Tyyppikilpi
6 Tuloilmaliitäntä
7 Säätöjalat
8 Tuhkalaatikko
9 Arina
10 Valmistenumero

IT Prima del montaggio

Se è necessario smontare l'inserto per spostarlo, rimuovere prima i componenti liberi. La procedura di smontaggio del rivestimento del focolare è descritta alla fine delle presenti istruzioni.

1 Deflettore fumi in acciaio
2 Vermiculite
3 Fondo in ghisa
4 Regolazione aria
5 Etichetta prodotto
6 Raccordo per la presa d'aria
7 Piedini regolabili
8 Cassetto della cenere
9 Griglia
10 Numero di serie

NL Voorafgaand aan montage

Als de inzet liggend moet worden verplaatst, moeten losse onderdelen worden gedemonteerd. De demontage van de haardbekleding wordt beschreven aan het eind van deze instructies.

1 Rookschot van plaatstaal
2 Vermiculiet
3 Gietijzeren bodem
4 Klep
5 Typeplaatje
6 Toevoerluchtaansluiting
7 Stelpoten
8 Aslade
9 Rooster
10 Serienummer

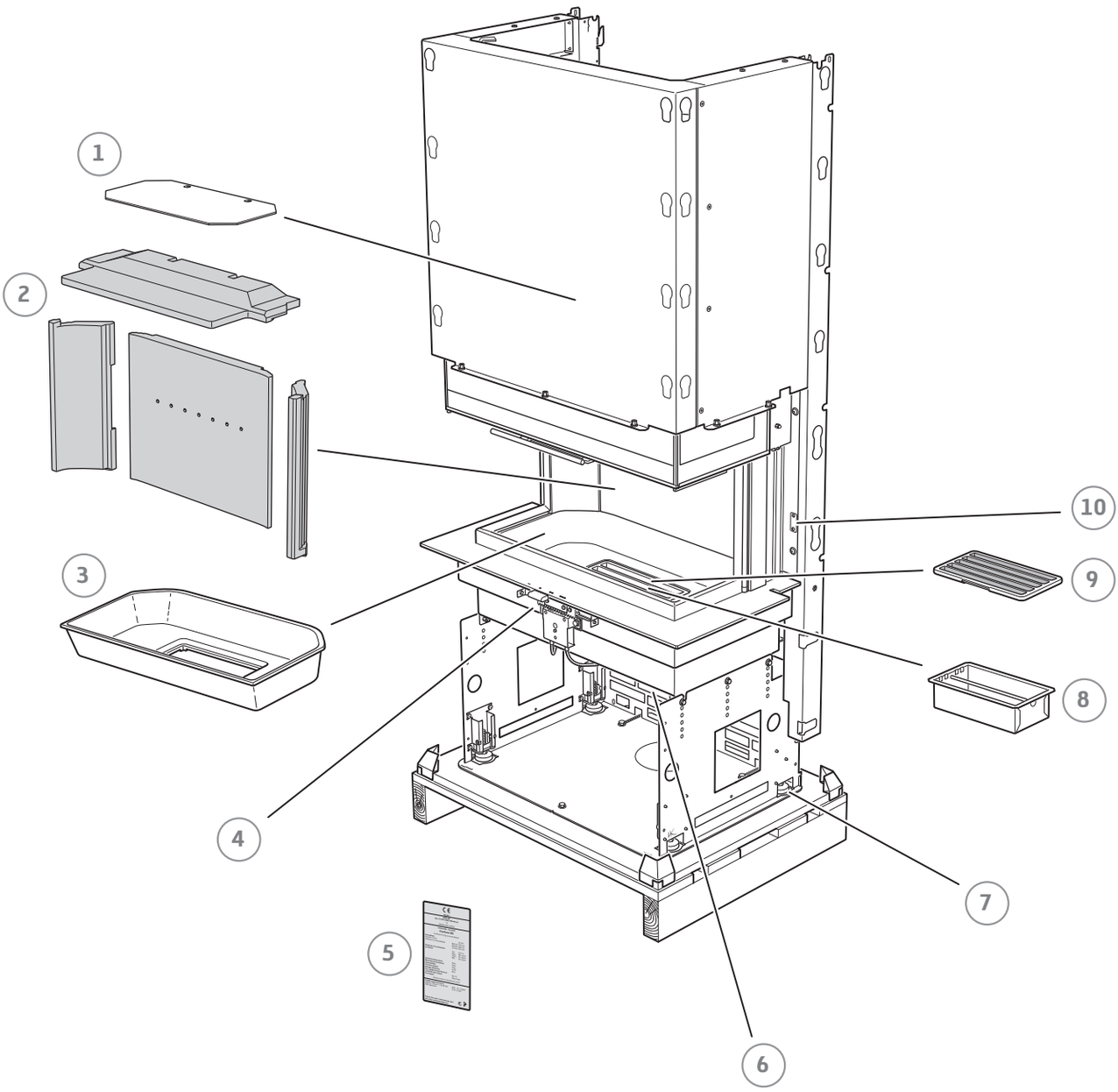
1
2
3
4
5
6
7
8
9
10

SE Öppning av sidoglas

DE Öffnen der Seitenscheiben

NO Åpning av sideglass

FR Ouverture des vitres latérales

GB Opening a side glass panel

DK Åbning af sideglas

FI Sivulasin avaaminen

IT Apertura del vetro laterale

NL Openen van zijruiten

1

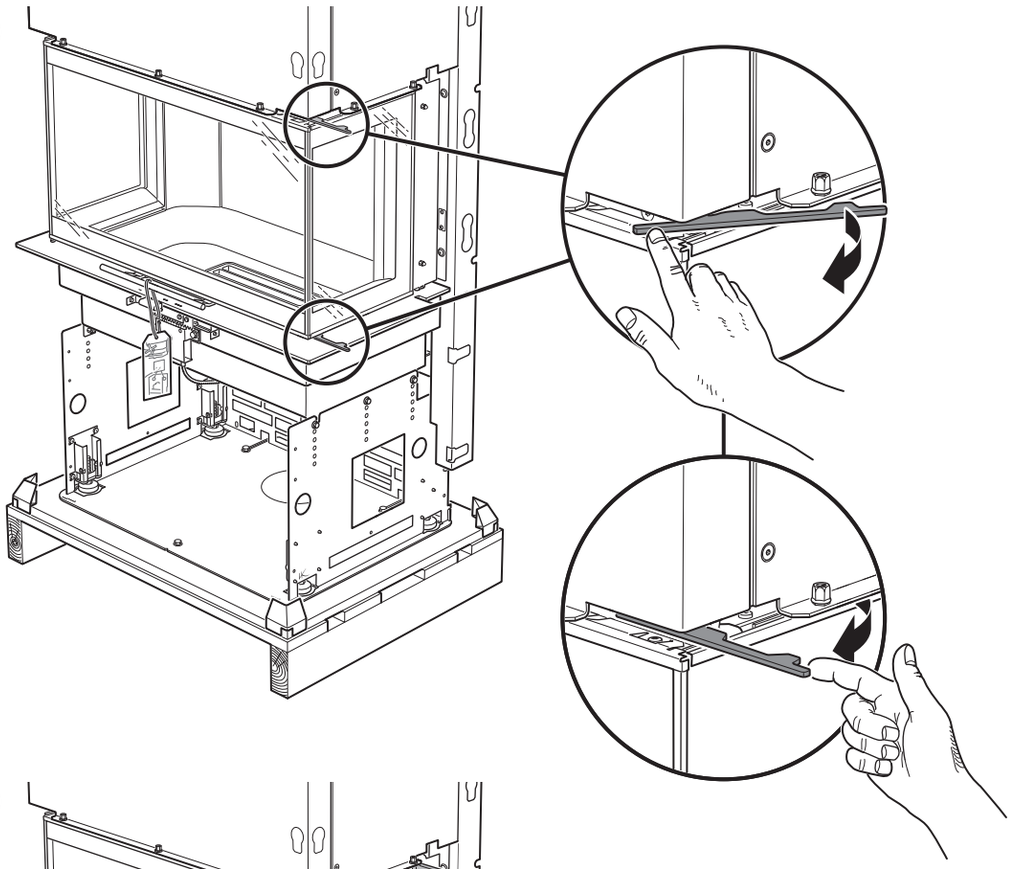

2

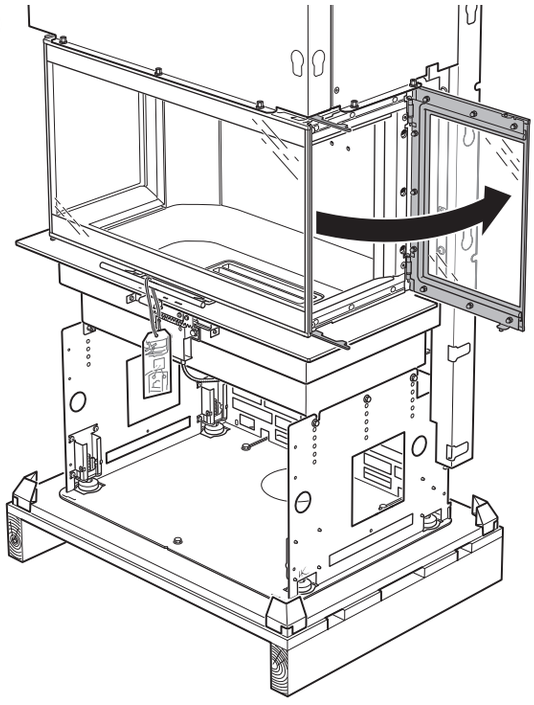

3

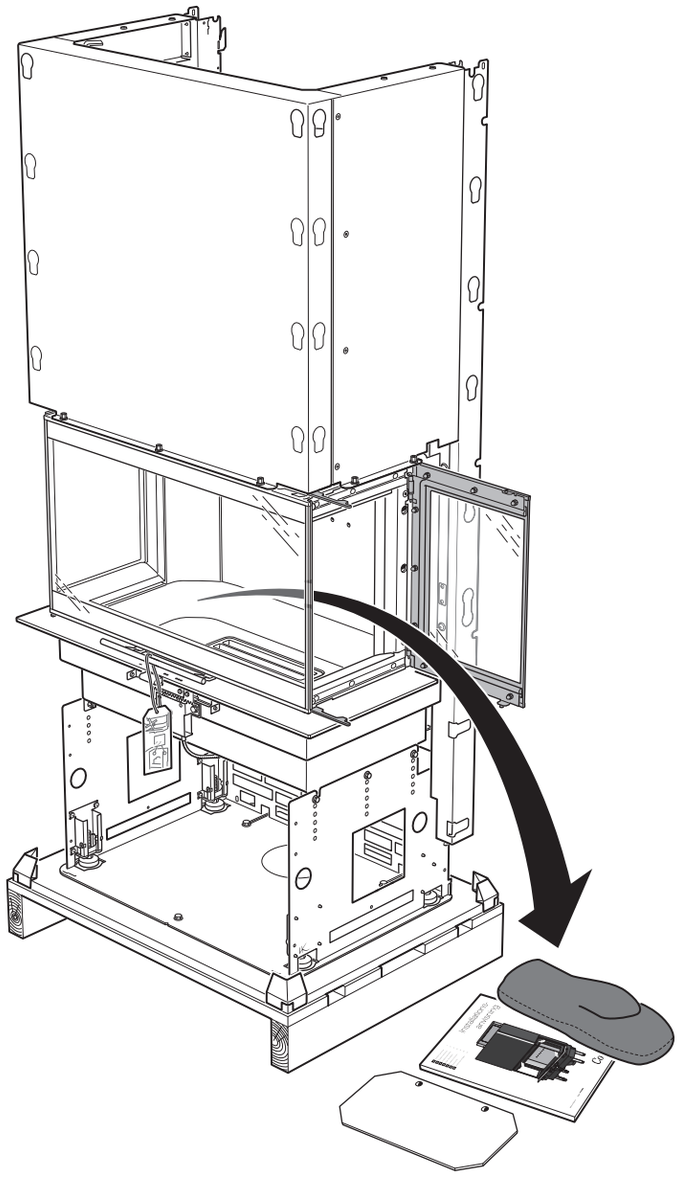

4

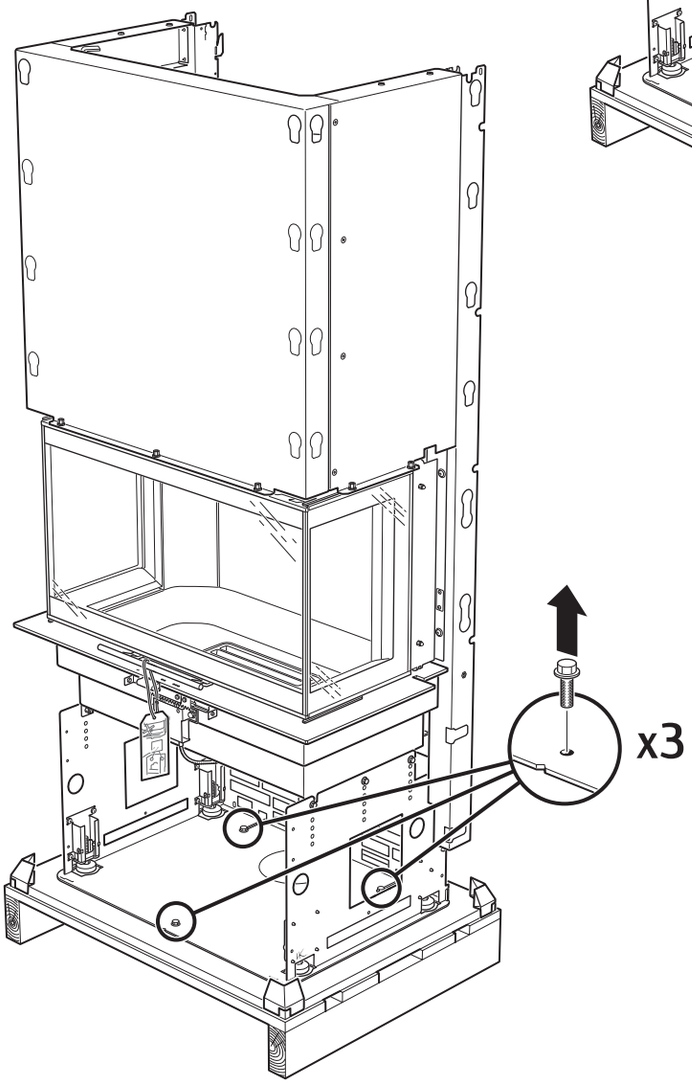

5

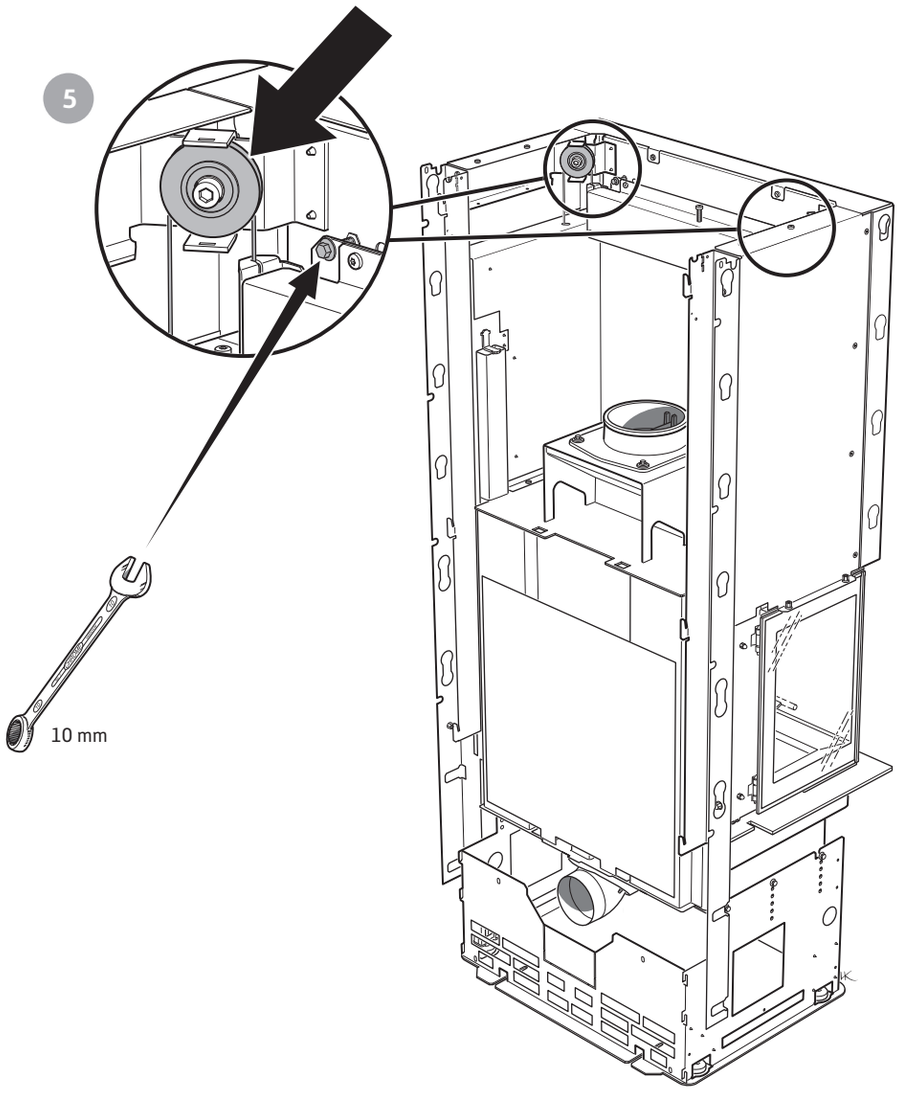

6

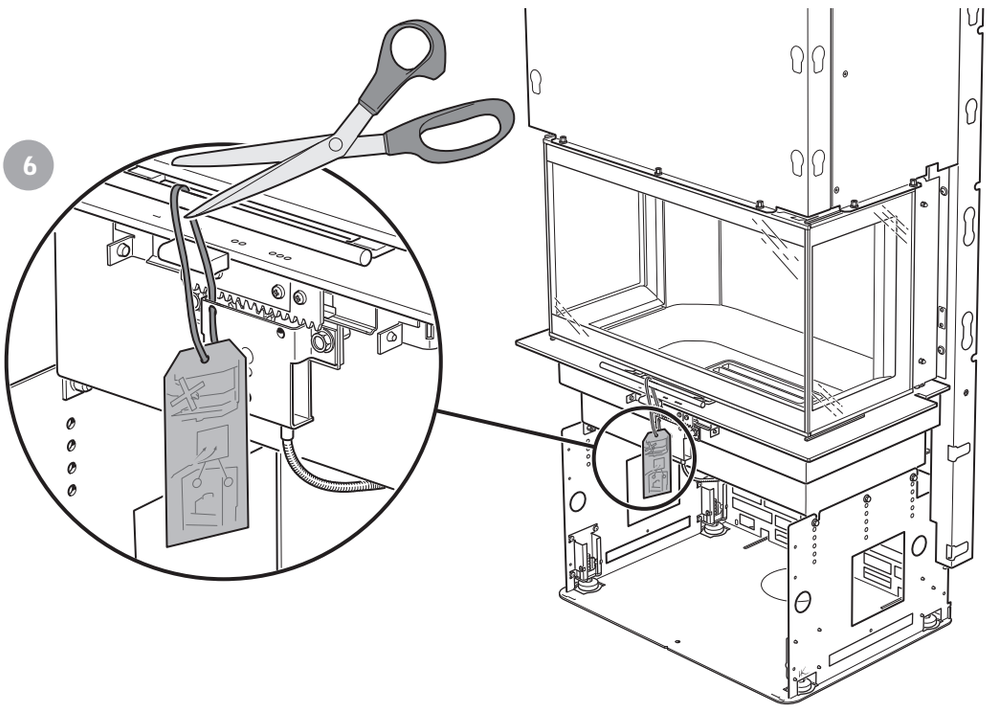

SE Funktionskontroll

Genomför en funktionskontroll på insatsen på följande sätt:
Använd de ställbara fötterna för att placera insatsen i våg.
Kontrollera att luckan går att öppna och stänga.
Kontrollera att spjällknoppen kan flyttas fram och tillbaka enligt max- och minmarkeringen.

DE Funktionskontrolle

So kontrollieren Sie die Funktionsweise des Einsatzes:
Richten Sie den Einsatz mithilfe der einstellbaren Füße waagerecht aus. Kontrollieren Sie, ob sich die Tür öffnen und schließen lässt.
Stellen Sie sicher, dass sich der Klappenknauf zwischen Minimal- und Maximalkennzeichnung vor- und zurückbewegen lässt.

NO Funksjonskontroll

Foreta en funksjonskontroll av innsatsen på følgende måte:
Bruk de justerbare føttene for å plassere innsatsen i vater.
Kontroller at døren kan åpnes og lukkes.
Kontroller at spjeldknotten kan flyttes frem og tilbake i henhold til maksimums- og minimumsmarkeringen.

FR Contrôle de fonctionnement

Effectuez un test de fonctionnement de l'insert comme suit :
Utilisez les pieds réglables pour placer l'insert horizontalement.
Vérifiez que la porte s'ouvre et se ferme.
Vérifiez que le bouton du registre bouge d'avant en arrière jusqu'aux positions max. et min.

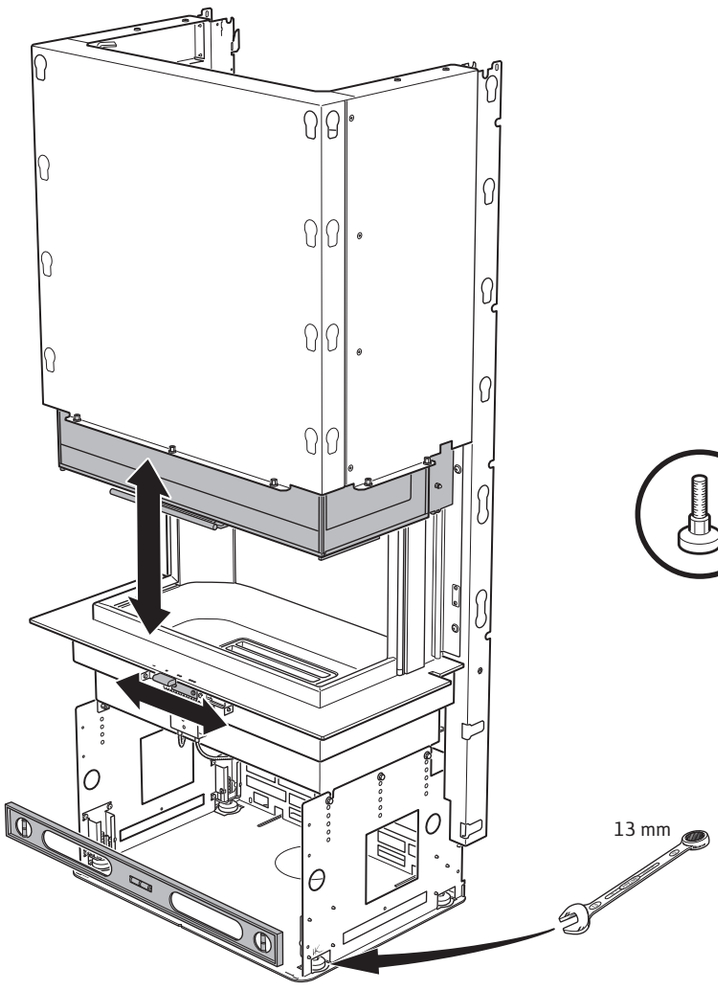

GB Performance check

Check the performance of the insert as follows:
Use the adjustable feet to level the insert. Check that the door can be opened and closed.
Check that the damper knob can be moved back and forth to the max. and min. marks.

DK Funktionskontrol

Foretag en funktionskontrol af indsatsen som følger:
Benyt de justerbare fødder for at sætte indsatsen i vater.
Kontroller, at lågen kan åbnes og lukkes.
Kontroller, at spjældknoppen kan flyttes frem og tilbage i henhold til maks.- og min.-markeringerne.

FI Toiminnan tarkastus

Tarkasta takkasydämen toiminta seuraavasti:
Säädä takkasydän pystyasentoon säätöjalkojen avulla. Tarkasta, että luukun voi avata ja sulkea.
Tarkasta, että palamisilmasäädin liikkuu edestakaisin luukkuun merkittyjen maksimi- ja minimiasentojen välillä.

IT Controllo del funzionamento

Eseguire un controllo funzionale dell'inserto, come descritto in seguito:
Usare i piedini regolabili per livellare l'inserto. Controllare che lo sportello si apra e si chiuda senza problemi.
Controllare che la manopola di regolazione dell'aria possa essere spostata avanti e indietro tra le regolazioni minima e massima.

NL Functiecontrole

Voer op de volgende manier een functiecontrole van de inzet uit:
Gebruik de stelpoten om de inzet waterpas te zetten. Controleer of u de deur kunt openen en sluiten.
Controleer of u de klepknop heen en weer kunt bewegen volgens de markeringen max. en min.

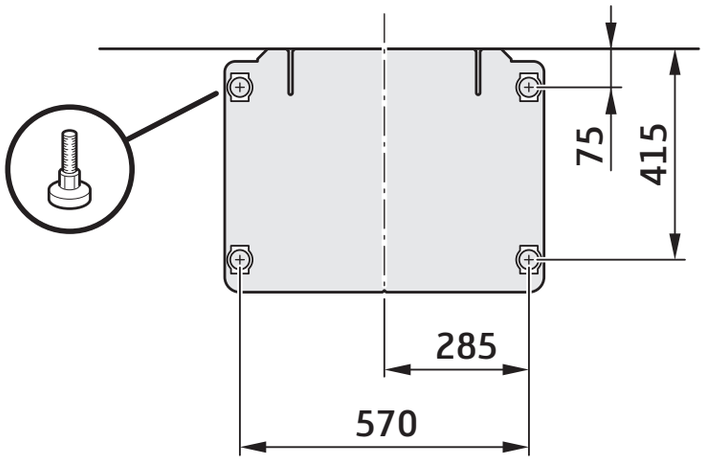

SE Från vår fabrik är skenorna som luckan löper i insmorda med specialfett som tål höga temperaturer. Normalt är denna typ av fett svår att hitta på marknaden och vi rekommenderar att ta kontakt med Conturas återförsäljare för att beställa detta specialfett vid smörjning av skenorna.

DE Die Führungsschienen der Tür sind werkseitig mit Spezialfett geschmiert, das beständig gegenüber hohen Temperaturen ist. Normalerweise ist dieses Fett auf dem Markt schwer erhältlich. Um dieses Spezialfett zum Schmieren der Schienen zu bestellen, empfehlen wir Ihnen, sich an einen Contura-Händler zu wenden.

NO Skinnene som døren løper i, er fra fabrikkens side innsmurt med et spesialfett som tåler høye temperaturer. Denne typen fett er vanligvis vanskelig å få tak i, og vi anbefaler derfor at du tar kontakt med en av Conturas forhandlere for å bestille dette spesialfettet til smøring av skinnene.

FR Les rails assurant le coulissement de la porte sont lubrifiés d'usine avec une graisse spéciale résistant à des températures élevées. Ce type de graisse est normalement difficile à trouver sur le marché et nous vous recommandons de vous mettre en contact avec votre revendeur Contura pour la commander.

GB The hatch runners are lubricated at the factory, with special grease that can withstand high temperatures. This type of grease is usually difficult to find on the market and we recommend contacting a Contura dealer to order this special grease when lubricating the runners.

DK Skinnerne, som lågen løber i, er fra fabrikken smurt med specialfedt, som tåler høje temperaturer. Normalt er denne type fedt vanskelig at finde i handlen, og vi anbefaler at kontakte din Contura-forhandler for at bestille dette specialfedt ved smøring af skinnerne.

FI Luukun kiskot on tehtaalla voideltu korkeita lämpötiloja kestävällä erikoisrasvalla. Tämän tyyppistä rasvaa on tavallisesti vaikeaa löytää. Suosittelemme, että tilaat tätä erikoisrasvaa Contura-jälleenmyyjältäsi, jos kiskot kaipaavat voitelua.

IT Di fabbrica, le guide di apertura dello sportello sono lubrificate con un grasso speciale resistente alle alte temperature. Normalmente questo tipo di grasso è di difficile reperimento sul mercato, quindi consigliamo di contattare il rivenditore Contura per ordinare il grasso specifico per la lubrificazione delle guide.

NL In de fabriek zijn de rails van de deur gesmeerd met speciaal vet dat tegen hoge temperaturen bestand is. Normaal gesproken is dit type vet moeilijk te vinden en wij bevelen aan contact op te nemen met uw Contura-dealer om dit speciale vet voor het smeren van de rails te bestellen.

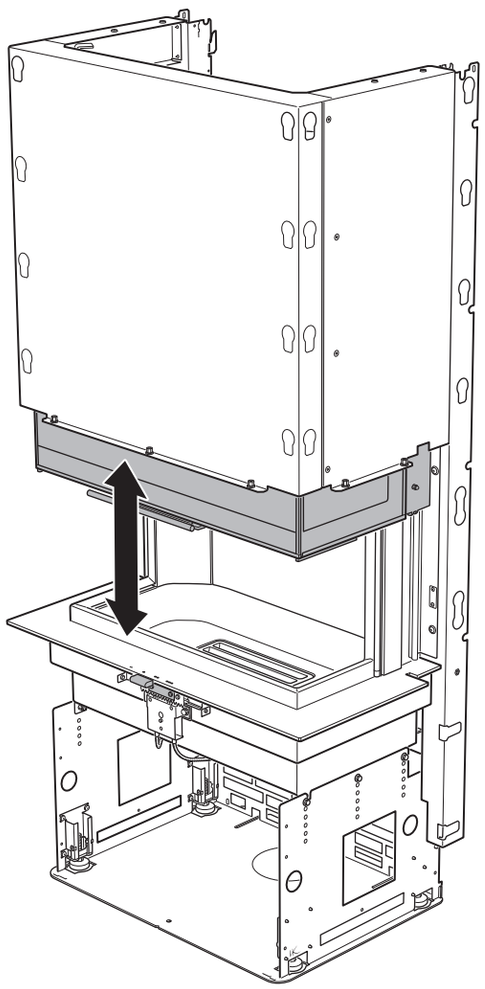

SE Strålningsplåt

Montera strålningsplåten enligt separat anvisning.
Notera att strålningsplåten ersätts av Conturas skyddsvägg vid montering av alla varianter av Ci51.

DE Strahlungsblech

Montieren Sie das Strahlungsblech gemäß der separaten Anleitung.
Achten Sie darauf, dass das Strahlungsblech bei allen Varianten des Ci51 durch die Contura-Schutzwand ersetzt wird.

NO Stråleplate

Monter stråleplaten i henhold til egen anvisning.
Vær oppmerksom på at stråleplaten erstattes av Conturas beskyttelsesvegg ved montering av alle varianter av Ci51.

FR Plaque de protection thermique

Montez la laque de protection thermique selon les instructions séparées.
Notez que la plaque de protection thermique est remplacée par la protection murale de Contura lors de l'installation de toutes les variantes de Ci51.

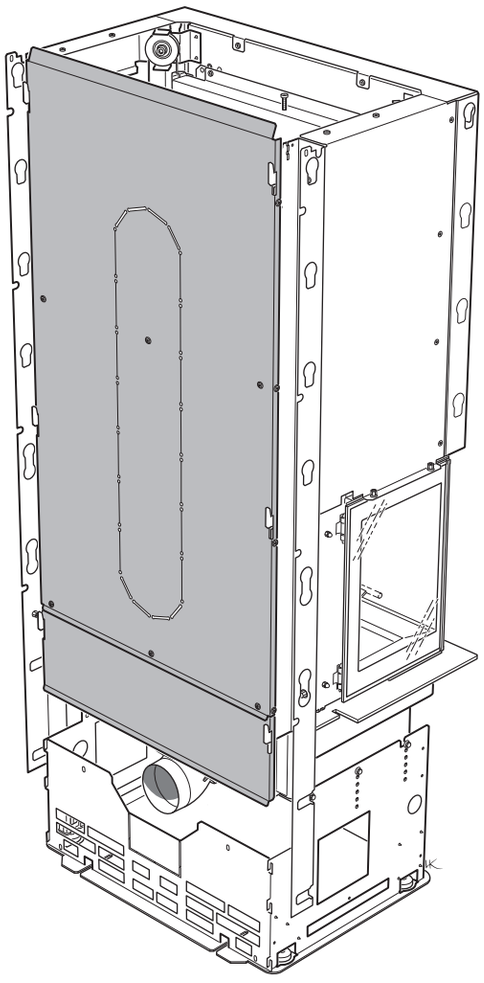

GB Heat deflector

Install the heat deflector according to separate instructions.
Note that Contura's protective screen is used instead of the heat deflector for all Ci51 installations.

DK Strålingsplade

Monter strålingspladen i henhold til separat anvisning.
Bemærk, at strålingspladen erstattes af Conturas beskyttelsesvæg ved montering af alle varianter af Ci51.

FI Lämpökilpi

Asenna lämpökilpi erillisen ohjeen mukaan.
Huomaa, että kaikkien Ci51-mallien yhteydessä lämpökilpi korvataan Contura-suojaseinällä.

IT Piastra di irraggiamento

Montare la piastra di irraggiamento secondo le istruzioni specifiche.
Notare che la piastra di irraggiamento viene sostituita dalla parete protettiva Contura per il montaggio di tutte le varianti di Ci51.

NL Stralingsplaat

Monteer de stralingsplaat overeenkomstig de afzonderlijke instructies.
Let op: de stralingsplaat wordt vervangen door een beschermwand van Contura bij de montage van alle varianten van de Ci51.

SE Montering av rökhylla i plåt

DE Montage der Rauchumlenkplatte aus Blech

NO Montering av røykhylle i metall

FR Montage du déflecteur de fumée en tôle d'acier

GB Installation of metal baffle plate

DK Montering af røgvendeplade af stål

FI Peltisavuhyllyn asennus

IT Montaggio del deflettore fumi in acciaio

NL Rookschot van plaatstaal monteren

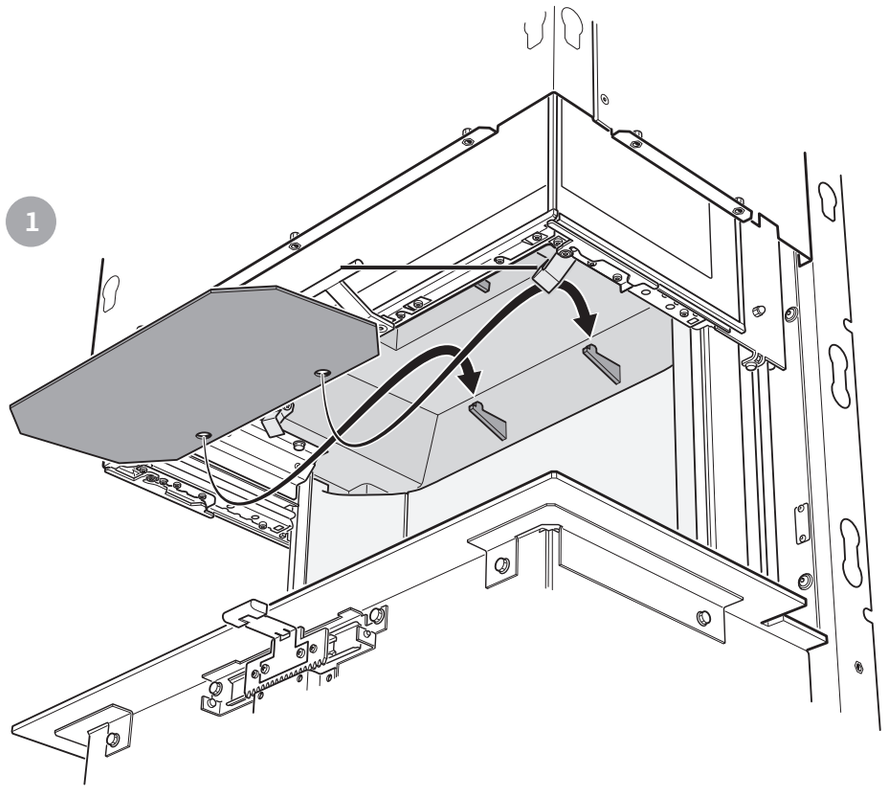

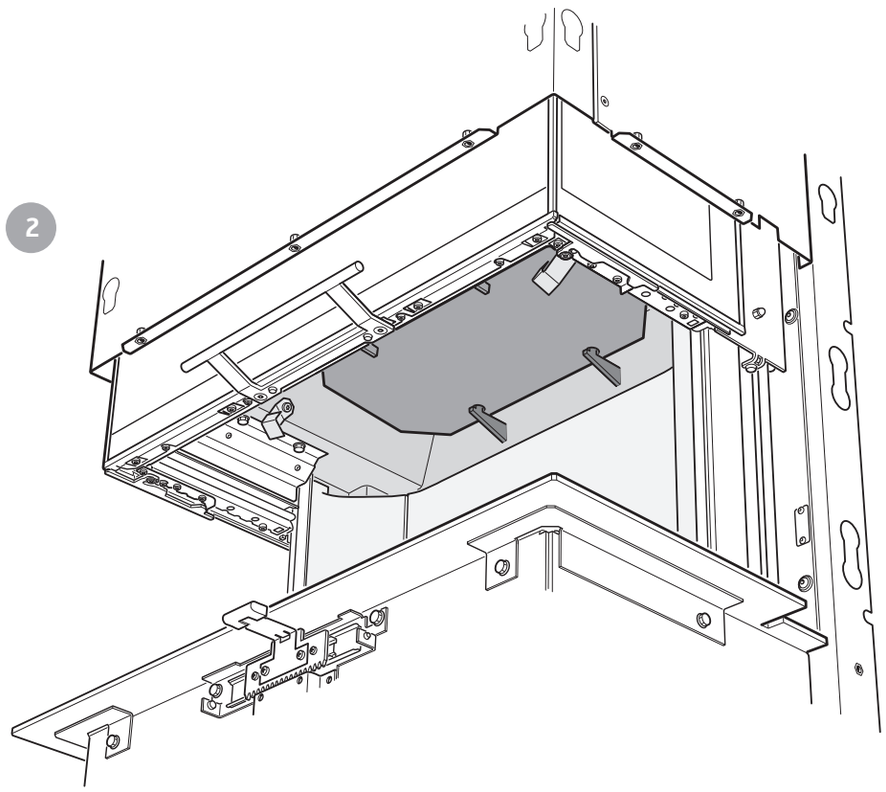

SE Demontering av eldstadsbeklädnad

DE Demontage der Brennraumauskleidung

NO Demontering av ildstedsbekledning

FR Démontage des éléments d'habillage du foyer

GB Removing the hearth cladding

DK Afmontering af ovnbeklædning

FI Tulipesän verhouksen irrotus

IT Rimozione del rivestimento del focolare

NL Demontage van de haardbekleding

1

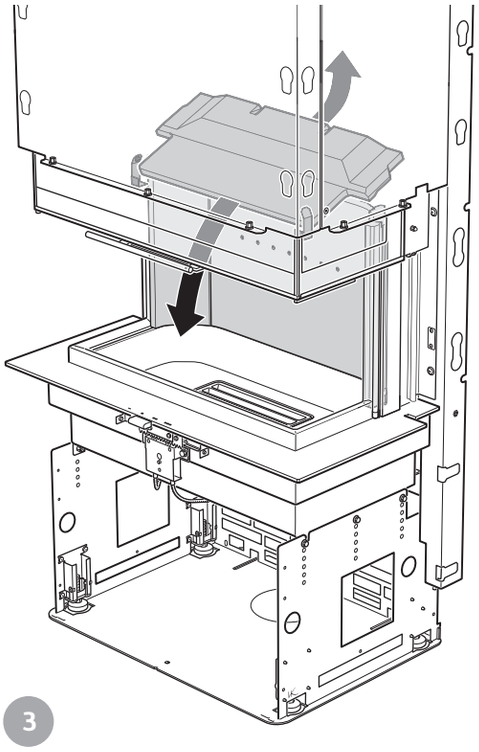

2

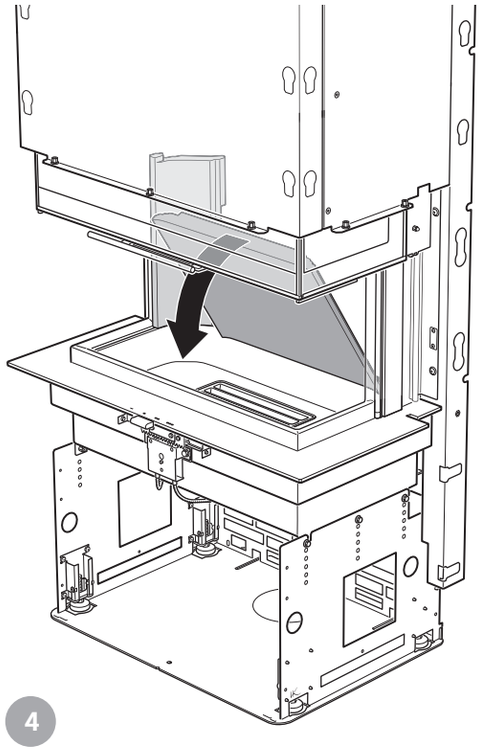

3

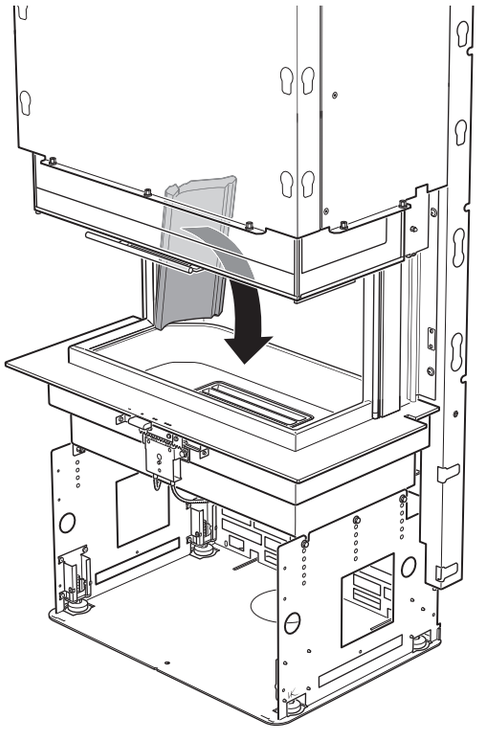

4

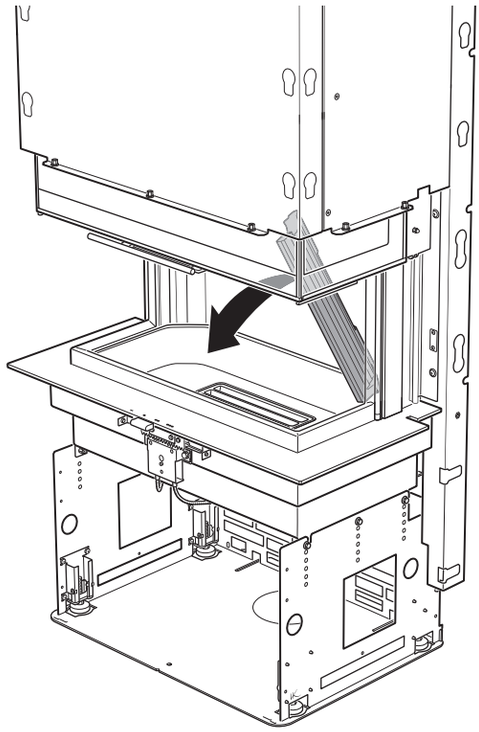

5

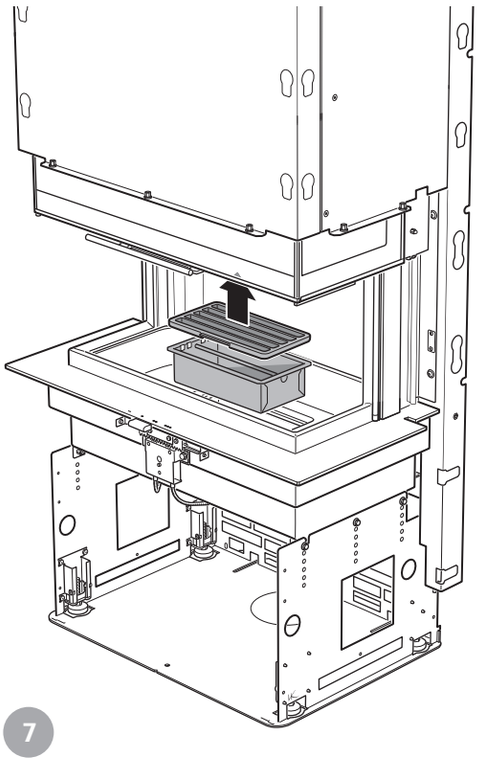

6

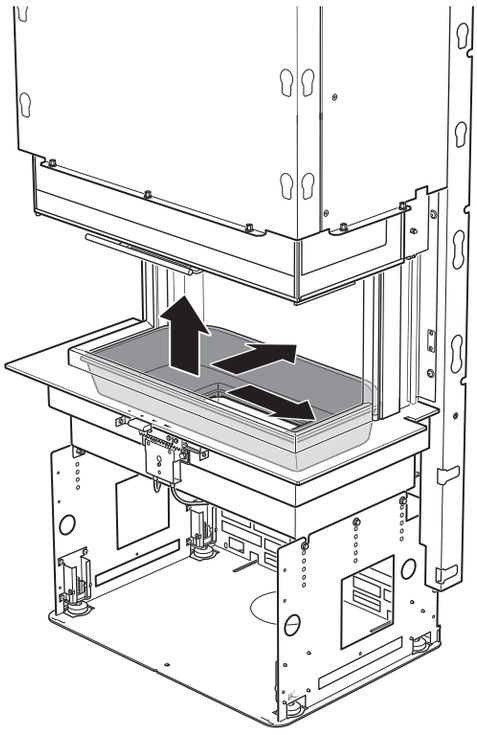

7

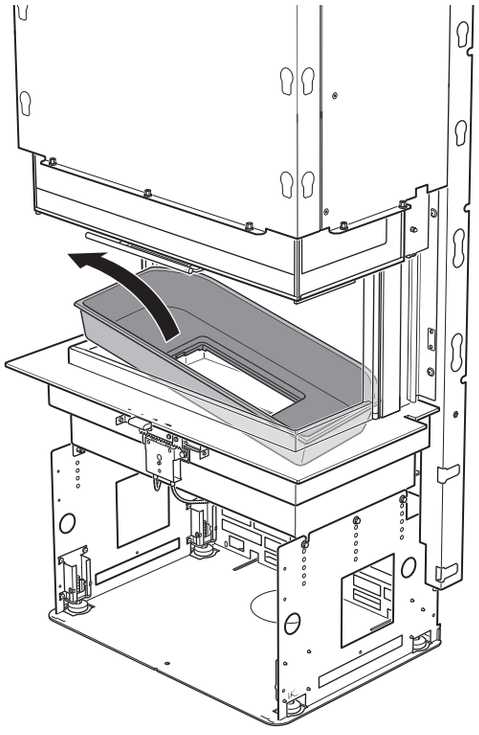

SE Montering av Powerstone
Tillval

DE Powerstone-Montage
Zubehör

NO Montering av Powerstone
Tilbehør

FR Montage des blocs de Powerstone
Options

GB Installing Powerstone
Option

DK Montering af Powerstone
Ekstraudstyr

FI Powerstone-lämpömakasiinin asennus
Lisävarusteet

IT Montaggio del Powerstone
Accessori

NL Powerstone monteren
Opties

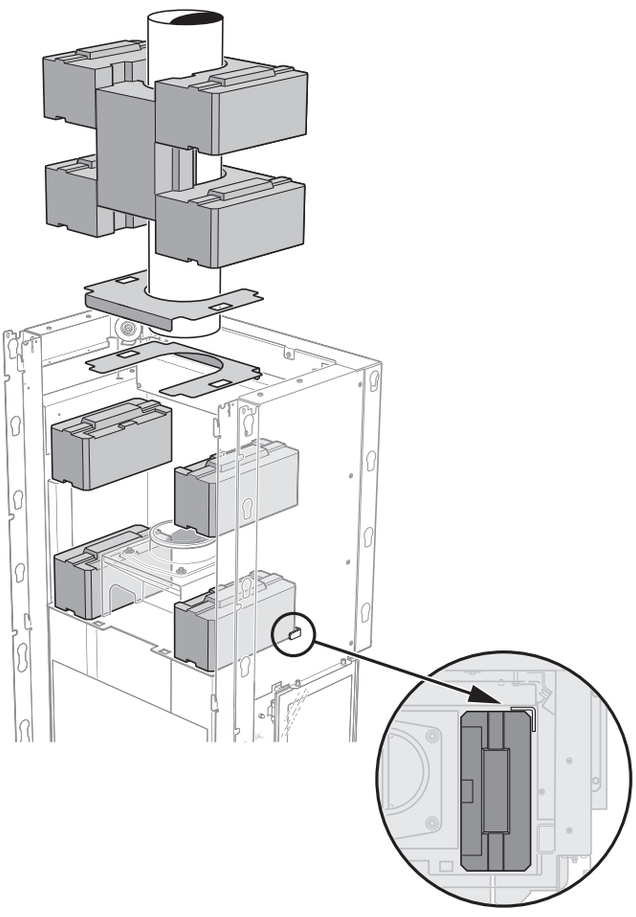

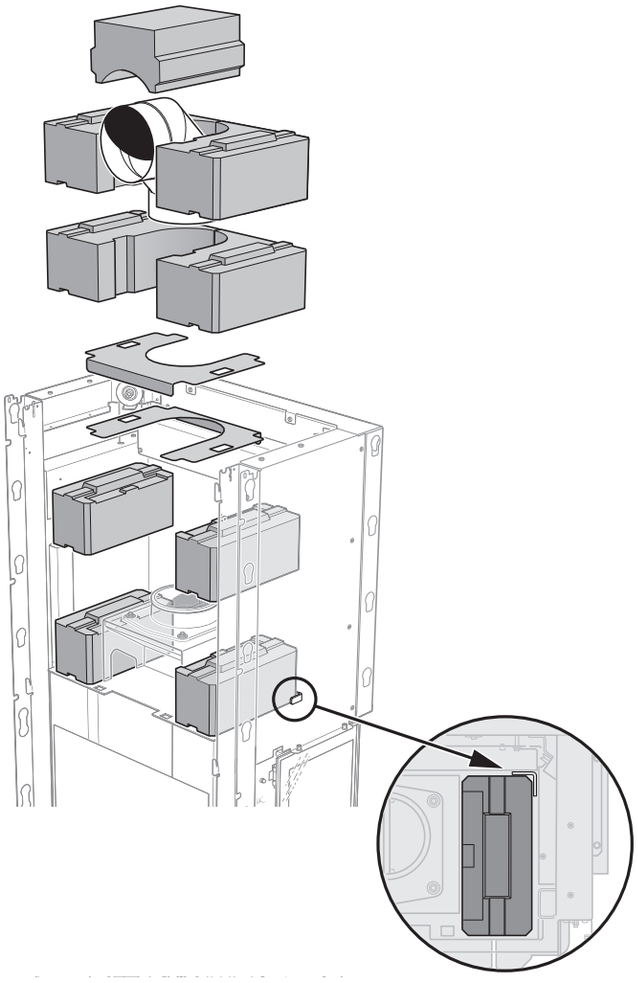

811436 IAV SE-EX Ci50-4
2026-11-18

Contura

Contura AB · Box 134 · 285 23 Markaryd · Sweden
contura.eu